Nodolini

S45 - 43° DUST SUPPRESSION

Female Thread Connection 2" BSPF or 2" NPTF
Flange Connection PN6 DN50
Flange Connection ANSI DIN (ANSI 2" - DIN 50)

- *Turbine Sprinkler*
- *Concial pipe: high performances*
- *Perfect functioning on steep terrain*
- *No vibrations*
- *No break*
- *The sprinkler can operate with an angle of just 4°*
- *Stainless steel ring nozzles*

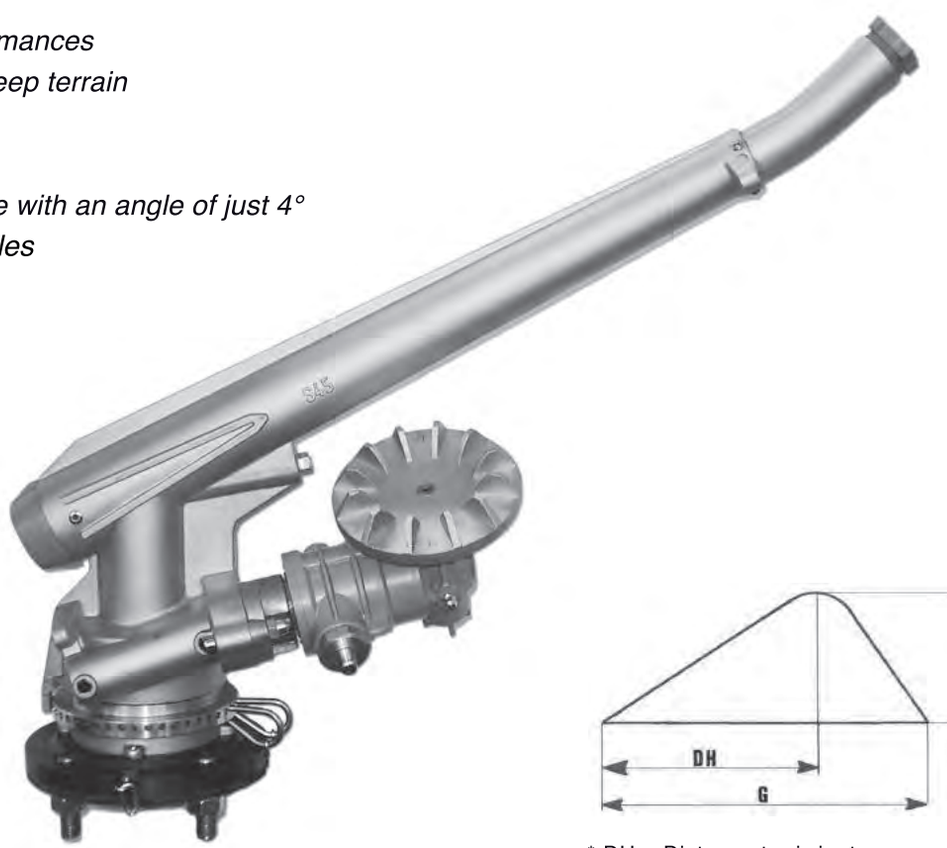

* DH = Distanza tra irrigatore e apogeo
Distance from sprinkler to apogee

Nozzle ø mm	*Pressure* Atm.	*Discharge* l/min	*Lenght of jet G* m	*Apogee H* m	*Distance DH** m
12	2,0 - 3,0 - 4,0	134 - 164 - 190	24 - 29 - 31	8,5 - 9,5 - 10,5	14 - 17 - 18,5
14	2,0 - 3,0 - 4,0	183 - 224 - 258	26 - 32 - 34	9 - 10 - 11	15 - 18 - 20
16	3,0 - 4,0 - 5,0	292 - 337 - 377	33 - 37 - 39	10,5 - 11,5 - 13	19,5 - 21 - 22,5
18	3,0 - 4,0 - 5,0	370 - 427 - 477	34 - 37 - 42	11 - 12,5 - 14	20 - 23 - 25
20	3,0 - 4,0 - 5,0	456 - 527 - 590	36 - 41 - 46	11,5 - 13,5 - 15	22 - 23,5 - 26,5
22	4,0 - 5,0 - 6,0	638 - 713 - 780	42 - 47 - 49	14 - 15,5 - 17	24,5 - 27,5 - 29,5
24	4,0 - 5,0 - 6,0	730 - 817 - 895	43 - 48 - 52	14,5 - 16,5 - 18	25,5 - 28,5 - 30,5

The technical characteristics are indicative and not binding